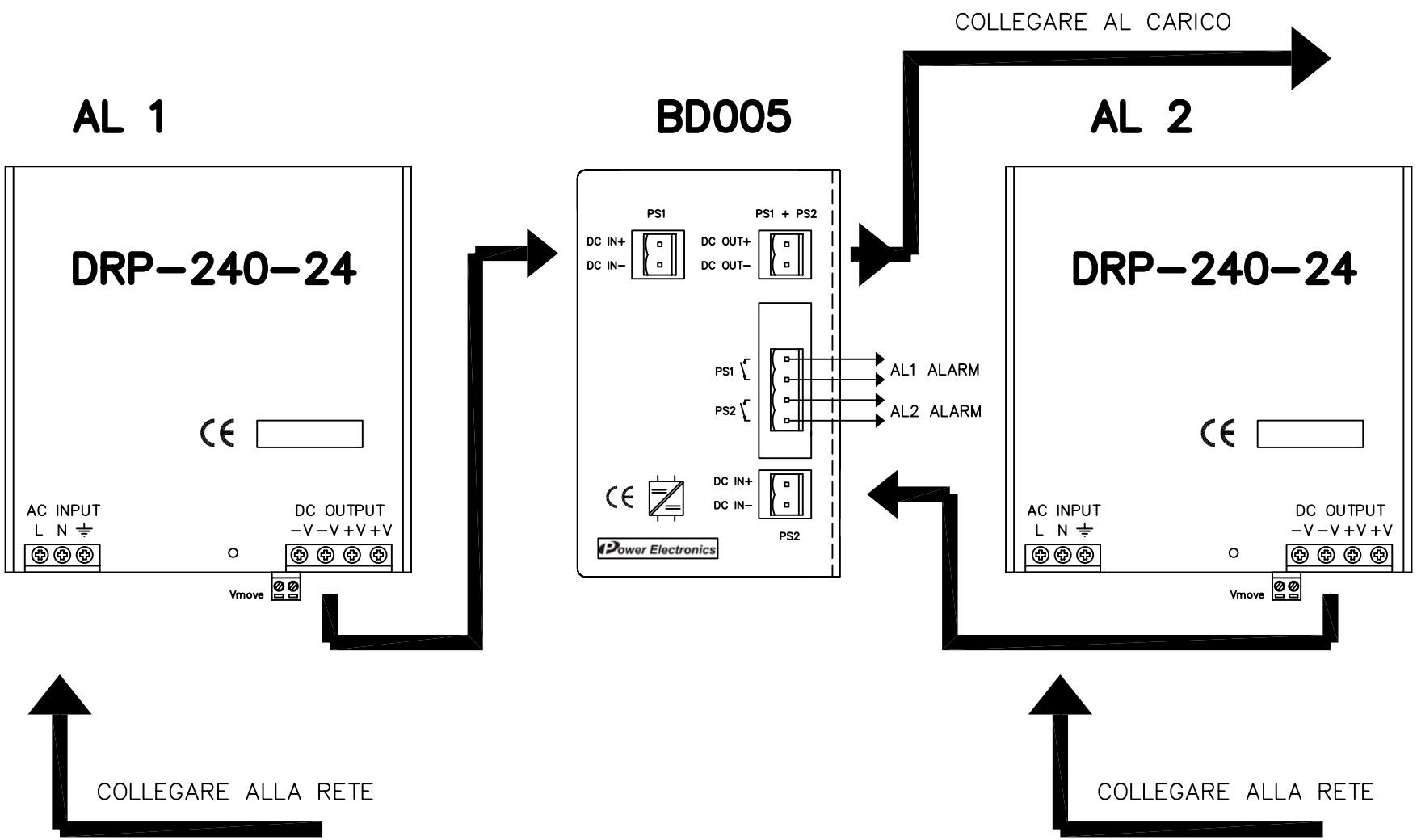

POWER ELECTRONICS s.r.l.		
Title	ILLUSTRATIVO SISTEMA DIN 240W RIDONDATO SCHEMA D'INTERCONNSSIONE	
Size A	Document Number ILLsistRid240W	Rev.
Date: 24/10/2008	Sheet 1 of 1	